PT

winterhalter®

The new passthrough dishwashers of the PT Series

WORKHORSE

Hard work made easy.

One machine for perfect cleanliness and hygiene. Perfectly coordinated accessories. Specially developed chemicals. Advice and personal support. Planning expertise and training courses. Monitoring, reporting and service. All that and more from Winterhalter.

HARD WORK.

Rush hour in the kitchen. The Winterhalter PT is at the heart of it all. Racks with dirty dishes are loaded onto the inlet table. The wash cycle starts. The clean dishes are taken out on the other side. Everything is perfectly coordinated. No compromises. The PT Series makes it happen: designed to meet the highest demands and streamlined for maximum economy. An all-rounder for a wide range of wash items. Simple, efficient, fast. And totally reliable. Available in three machine sizes. A real workhorse.

»The PT Series is our all-rounder. A real workhorse. It can be used in a variety of ways for different wash items, washing perfectly clean and efficiently. Making it a thoroughly reliable partner behind the scenes!«

Leonie Hengeler, INTERNATIONAL PRODUCT MANAGER

FIRST-CLASS WASH RESULTS

No matter how stubborn the dirt is: The PT Series guarantees certified cleanliness and hygiene. With the powerful warewashing system and the effective quadruple filtration, you are totally prepared for every eventuality.

ABSOLUTELY RELIABLE

The PT delivers exactly what a machine needs for the daily grind of everyday warewashing: innovative technology, high-quality workmanship, and low susceptibility to faults. A machine you can rely on instinctively.

HIGH ECONOMIC EFFICIENCY

Washing with the PT means washing efficiently: low water consumption, optimised energy use, minimal chemical consumption, and digital operation. This means that with the PT your operating costs are minimised.

SIMPLE TO USE

The PT makes washing a bit easier, with intuitive and simple operation, ergonomic handling and practical functionality. Your dishwashing staff will enjoy the ease of operation.

HARD WORK MADE EASY.

Different wash items with heavy soiling. Peak periods with a high volume of wash items. Continuous operation over many hours. At Winterhalter, we know how hard it is to work in a kitchen. Both for those that work there, and for the machines.

That is why we are not satisfied with just providing our customers with modern and innovative ware-washing technology. We give them a machine that makes washing as easy as possible, even under the most difficult conditions. One that leaves them prepared for every eventuality. Because the machine works perfectly. Because it simplifies and speeds up the entire washing process. Because it can be relied on one hundred percent in every situation. No matter what comes its way. For years to come.

Note: the product illustrations are customer-specific configurations that may also include products from other manufacturers.

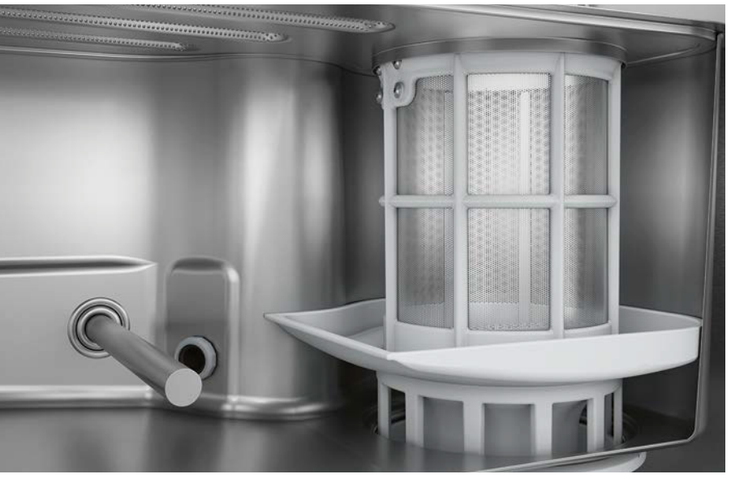

A detailed overview of the PT Series is available on our website at:

>> www.winterhalter.com/pt

SMART TOUCH DISPLAY

Ready for the future: A smart touch display is at the heart of the PT cockpit. With single-button operation, language-neutral interface and self-explanatory pictograms. The colour display reacts sensitively and can be operated even when wearing gloves – the surface is made of glass and is very robust. All the functions can be called up via three simple operating levels: one for users, and one PIN-protected level each for the chef and the service technician.

FILTRATION SYSTEM

Washing up is dirty and heavy work. The PT is prepared for this: with an effective quadruple filtration system. In stage 1, the tank water is passed over a strainer, which transports the dirt into the filter cylinder. There, in stage 2, the dirt particles are filtered out of the water. In stage 3, the filter bottom ensures that small objects such as toothpicks cannot block the pump. In stage 4, the Mediamat filters the finest dirt particles such as coffee grounds from the water. An additional pump protection strainer prevents mechanical damage to the pump. The result: continuously clean tank water. And the cleaner the tank water, the better the wash result.

WAREWASHING SYSTEM

The heart of the PT Series: Two internal S-shaped wash fields are at work inside the machine. Thanks to the flow optimisation and the special nozzle geometry, they ensure that the water is distributed evenly during cycles. This ensures first-class wash results – with a rinse water volume quantity from 2.2 litres per wash cycle. Quality down to the smallest detail: Robust axles made from stainless steel guarantee the best rotation and contribute to the high reliability of the PT.

HYGIENE CONCEPT

The PT Series passthrough dishwashers are based on a concept of perfect hygiene and easy cleaning. There is a special hygiene rack guide. The tank is deep-drawn and has a hygienic heating element. That means: There are no nooks, crannies or concealed corners in the interior in which dirt can accumulate or deposits can form. The detergent sensor, hygiene logbook, Thermostop function and CONNECTED WASH provide additional safety. In other words, the PT offers an extremely high hygiene standard. This is confirmed by the DIN SPEC 10534 hygiene certificate.

VARIABLE WASH PRESSURE ADJUSTMENT

Each PT comes with variable water pressure regulation as standard: VarioPower adjusts the wash pressure precisely to the type of dishes and how dirty they are. Fine glasses and fragile bowls are washed at low water pressure, while sturdy dishes are washed at a higher water pressure. Heavy soiling is reliably cleansed, while light and delicate wash items are handled gently and held securely in position.

WASTE WATER HEAT RECOVERY

A clear bonus for the PT Series: The EnergyLight waste water heat recovery system is fitted as standard. The heat exchanger uses the energy from the waste water to heat the cold inlet water. The advantages: the machine heats up faster between wash cycles, resources are conserved, and energy costs are saved by up to 10 %.

EXHAUST AIR HEAT RECOVERY

With the PT, the EnergyPlus exhaust air heat recovery system is available as an optional extra. In contrast to standard waste water heat recovery, an exhaust air heat exchanger is also used. It uses the energy from the hot steam inside the machine to pre-heat the cold inlet water. When you open the machine, hardly any steam escapes. And up to 15 % of energy costs are saved per wash cycle.

AUTOMATIC HOOD

Convenient and practical too: The PT is available with an automatic hood. The machine can be operated without effort – a real relief for dishwashing staff. The hood is closed with the simple press of a button: via the display or an ergonomically positioned button. The wash cycle then starts automatically. At the end of the programme, the hood automatically lifts up to indicate that the wash cycle has finished.

DRIVEN RINSE SYSTEM

Take advantage of every opportunity to make savings: The PT Series is available with an optional driven rinse system – a patented innovation from Winterhalter. Here, a small electric motor for each wash field ensures that no water has to be used for the drive during rinsing and that the entire water volume is available for washing. Compared to the standard drive, the rinse water volume is reduced by 0.4 litres per wash cycle. And that means: significantly lower operating costs.

CONNECTED WASH *

More safety and efficiency: With CONNECTED WASH, the PT Series machines can be integrated into your network and all the important operating data can be evaluated. Consequently, recommendations and actions are made that will help to optimise the washing process. Moreover, the machine status can be monitored around the clock and from anywhere in the world.

* You can find out in which countries CONNECTED WASH is currently available and what functions and options it offers at www.connected-wash.com

CONFIGURATION AND OPTIONS:

YOUR TAILOR-MADE PASSTHROUGH DISHWASHER

First-class cleanliness and hygiene are the result of the most precise coordination possible: The machine size and machine settings need to be the right fit for the size, type and degree of soiling of the dishes. This is why the PT Series has been developed to ensure it can be perfectly tailored to match your individual requirements.

PT-M

The smallest for normal wash items:
the PT in size M. Ideal for dishes, glasses, cutlery and cups.

PT-L

More space for wide wash items:
the PT in size L. Also for large plates and trays.

PT-XL

More height for bulky wash items:
the PT in size XL. Also for Euronorm crates, GN 2/1 trays and smaller utensils.

AREAS OF APPLICATION

One golden wash rule is: The best wash results are achieved with racks stacked with the same types of dishes. So for example, glasses should always be washed differently to trays. Winterhalter has found a perfect solution for this: The PT Series can be preconfigured via software settings for different application areas – remove glasses, dishes, cutlery, bistro ware, or cups. This means that important parameters such as water pressure, temperature, contact time, and the dosing of the chemicals can be optimally set for the respective area of application. And this can be adjusted at any time as required.

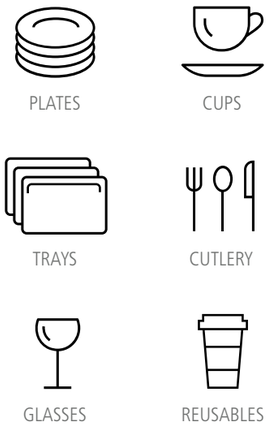

CORNER INSTALLATION

Turning a warewasher into a real warewashing solution: The PT Series adapts flexibly to the available on-site space and offers various installation options. The machine and its tables can be set up either in a continuous straight line or in a corner. The working direction can also be varied from left to right or right to left.

MACHINE COUPLING

Double the power: The PT Series allows two machines to be connected. The TwinSet offers several advantages: During peak periods, the washing capacity is doubled and even very large quantities of wash items can be handled. Dishes can also be washed separately by type – thereby improving the wash results. And: If the volume of wash items falls again, you can save on costs by operating just one machine.

Cleanliness and hygiene. Every single one of our products plays its part. Together they create the perfect wash result. Welcome to the complete Winterhalter system!

WASH RACKS

They are custom-made for glasses, dishes or cutlery. With their functional design they adapt precisely to the respective wash items, protecting them and preventing damage. They ensure ideal water and air circulation and fast drying. And of course they make handling and transporting wash items easier.

Wash racks are a key component of the Winterhalter complete system. We will be happy to advise you on which racks best suit your requirements. Culminating in the best solution for you.

CHEMICALS

Washing is essentially about two things: perfect cleanliness and maximum hygiene. Chemicals have a decisive influence on both. This is the reason they are an important component of the overall Winterhalter system.

Many years ago at our German headquarters, we therefore established a research and development department with an in-house laboratory. Here we develop and test formulae for a premium range of detergents and hygiene products. These are precisely tailored to the different wash items and types of contaminants, economical to use, and they can be ideally combined with other products in our range. They work together perfectly and deliver first-class wash results.

WATER TREATMENT

Deposits. Streaks. Marks. They are »little greetings from the kitchen« and the natural enemies of any restaurateur. This is because they expose poor washing quality. Limescale impairs the working of detergent and rinse aid and, in the long-term, damages the machine. The problem is water quality. The solution is professional water treatment.

In addition to devices for softening, partial and full demineralisation, there is the AT Excellence-M premium solution to meet the highest demands. Here the external reverse osmosis device is specially designed for the high volumes of dishes dealt with by the PT Series and removes 98 % of all substances dissolved in the water. The limescale and mineral-free osmosis water protects the warewasher and prevents any deposits on glasses, dishes and cutlery. The result: brilliant wash results straight from the machine – with no manual polishing.

ADVICE AND PLANNING

Winterhalter is the specialist in commercial warewashing systems. Familiar with the widest range of kitchens in the world, we know which aspects are important when it comes to washing and what has to be considered. We also enjoy passing this knowledge and experience on to our customers.

The aim: a perfect washing process. A big advantage of the PT Series is its flexibility. The machine adapts to the space you have on site and your working processes perfectly. Which installation variant offers you the best logistics? Are the inlet and outlet tables set out in a line or wrapped around a corner to save space? On which side do you want to take out the clean dishes? In other words, what is the working direction? Would a TwinSet with two connected machines make sense? Or a heat recovery system? We help you answer every single question. So that you can make the right choices when you make your investment.

Your partner, Winterhalter. Our team of advisers and planners analyse your individual on-site situation: the layout, the room arrangement, the processes. We plan your estimated requirements and calculate the necessary equipment. We help you organise your washing operation, optimise the washing logistics and provide instruction and training sessions for your employees. In short: when it comes to washing up, we're always there for you. From the start. And we help you to make your washing process as professional and efficient as possible.

What can we do for you? Let's talk about it: Tel. +49 7542 402-5408 or www.winterhalter.com/contact

Karl Winterhalter

Jürgen Winterhalter

Ralph Winterhalter

»We are family people!«

Down-to-earth. Forward-looking. With a focus on family. The culture and values of our family have shaped the Winterhalter company for three generations. Close to staff, customers and partners. Long-term thinking with a view to the generations to come. Taking personal responsibility – all typically Winterhalter. We are proud of our family company. And we are pleased to grow a little more every day.

THE FIRST WINTERHALTER

It all began in 1947: Karl Winterhalter established his own company in Friedrichshafen. He started by salvaging scrap metal from the war, which he used to manufacture household goods. Cooking pots and ovens, for example. A short time later he specialised, and in 1957 launched the GS 60 model: the first commercial warewasher from Winterhalter. That was the starting signal. Since then the company has always pursued a single goal: perfect wash results as part of an efficient washing process. With this holistic approach, Winterhalter has developed from a machine supplier to the full system provider of warewashing solutions it is today.

»Products, advice, service – three factors that intertwine seamlessly at Winterhalter. And that makes our customers feel safe in the knowledge that they have the right partner for any issue relating to the washing process.«

FROM WAREWASHER TO WAREWASHING SOLUTION

In days gone by, all we needed to do was deliver the new warewasher to our customer's kitchen on a hand truck. Now it's about the development of a new, individual warewashing solution, which is perfectly coordinated with the on-site situation and the special requirements and preferences of the customer. A solution of this type is based on clear analysis and planning. To achieve this, we visualise the room layout using state-of-the-art CAD software in 2D and 3D. For a bespoke and efficient washing process.

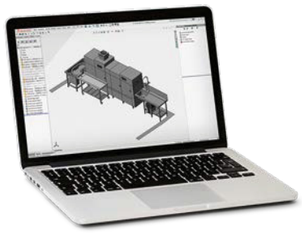

OVER **2.000**

EMPLOYEES WORLDWIDE

High quality standards. Diligence. Curiosity and ambition. These are the typical attributes of a Winterhalter employee. And with them, we have grown from a small Swabian family company into a global player: with over 40 branches worldwide and distribution partners in over 70 countries. We are proud of what we have achieved. And we are proud of each and every employee who has done their bit. So we would just like to take this opportunity to officially say »Thank you!«

IN-HOUSE LABORATORY FOR IMPROVED CHEMICALS

As a specialist in warewashing, do we want to rely on the products of other manufacturers? The answer to this question was an immediate and resounding »No!«. This was the moment, when our in-house research and development laboratory was born: we have been developing our own formulas for original Winterhalter chemicals for many years now, from detergents and rinse aids to hygiene products.

OUR ACADEMY OF WASHING SCIENCE

Almost 1,000 participants per year and 250 training days worldwide: as part of our training programmes we pass on our knowledge and experience in the discipline of »warewashing«. We provide training to our own personnel as well as to our retail and service partners. Our objective: every Winterhalter customer should receive informed advice and professional support in the specific situation. Whether it's an initial informative discussion, installing a warewasher, or service and maintenance appointments.

Good to know

As a specialist in warewashing, at Winterhalter we set high standards for ourselves: we don't just want to meet our customers' current requirements. We want to support them proactively and gain their trust for the long term. Service plays an important role here: our comprehensive network guarantees fast and professional support on site. Worldwide.

We and our service partners are there when you need us. On that you can always rely with Winterhalter.

NEXT LEVEL SOLUTIONS

What opportunities does new technology offer? How is our society and the world of work changing? Which trends and developments will shape commercial warewashing in the future? We find all of these questions extremely exciting. And that's why we are already working on developments that will affect us and our customers tomorrow, and the day after that. You can take a look at the solutions that we have developed in our NEXT LEVEL SOLUTIONS. Current examples include CONNECTED WASH and PAY PER WASH.

>> www.connected-wash.com >> www.pay-per-wash.com

»See you again soon!«

Customers often own a Winterhalter warewasher for 15 or 20 years. So our customers only have to worry about disposing of their old equipment once every few decades. What's more, we take care of this ourselves. We design our machines as modular systems, so they are easy to dismantle if ever the need arises. We reduce the range of materials, use standardised construction materials and label plastic parts for easy recycling. Winterhalter warewashers have a particularly high recycling ratio thanks to these and many other measures.

MADE IN GERMANY AND SWITZERLAND

As ever, it is not simply an indication of origin, but a seal of quality: products made in Germany and Switzerland are recognised worldwide for their premium quality and reliability. For engineering, inventiveness and precision. Winterhalter is the best proof of this: in Meckenbeuren, Endingen and Rüthi, we develop and produce solutions for first-class cleanliness and hygiene. This is our promise for every single warewasher that leaves our factory.

PT TECHNICAL DATA

PT-M / PT-M EnergyPlus

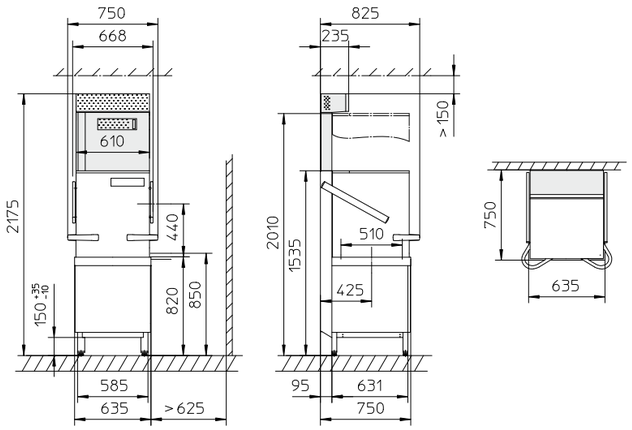

PT-M ClimatePlus

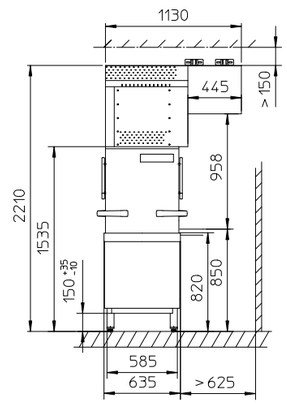

PT-L / PT-L EnergyPlus

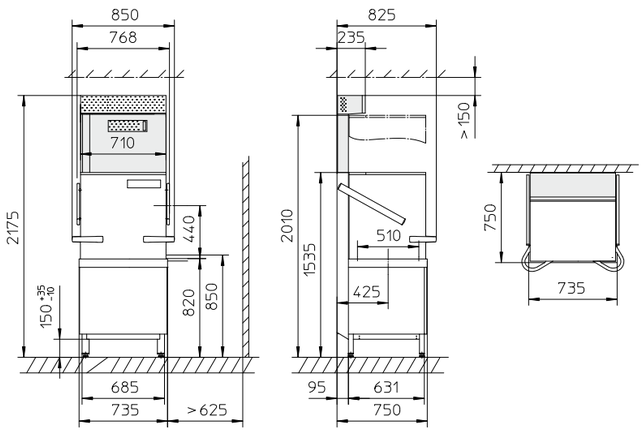

PT-L ClimatePlus

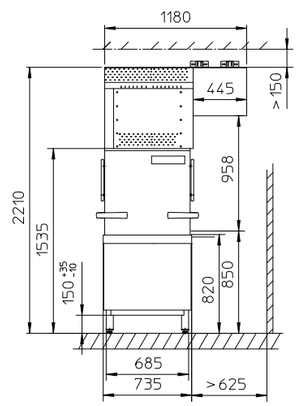

PT-XL / PT-XL EnergyPlus

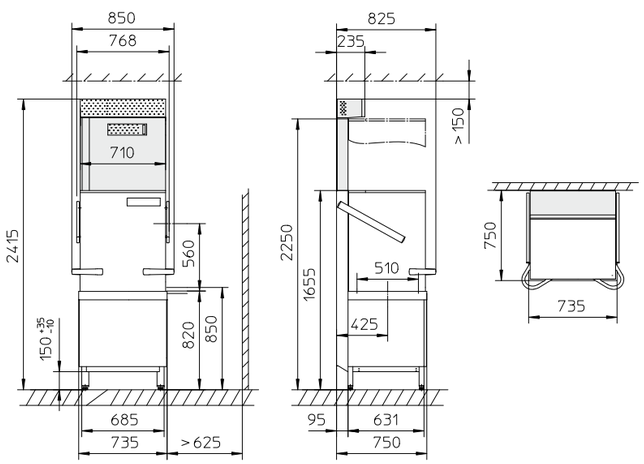

grey coloured = only for the PT EnergyPlus

General data		PT-M	PT-L	PT-XL
Tank capacity	l	35	35	35
Rack dimensions	mm	500 x 500	500 x 500 / 500 x 600	500 x 500 / 500 x 600
Clear entry height	mm	440	440	560
Working height *1	mm	850	850	850
Wash pump	kW	0.95	1.5	1.5
Noise emission	dB(A)	max. 62	max. 62	max. 62
Noise emission ClimatePlus	dB(A)	max. 70	max. 70	max. 70
Splash guard		IPX5	IPX5	IPX5
Weight net / gross	kg	137 / 151	142 / 158	148 / 167
– with EnergyPlus	kg	156 / 172	163 / 187	172 / 202
– with ClimatePlus	kg	213 / 287	220 / 296	–
Max. inlet water temperature	°C	60 (EnergyPlus, ClimatePlus, Cool: 20)		
Required water flow pressure	bar / kPA	1.0 – 6.0 / 100 – 600		
Required water flow pressure EnergyPlus / ClimatePlus	bar / kPA	1.5 / 150		
Tank heating *2	kW	2.5 Cool: 2 x 2.5	2.5 Cool: 2 x 2.5	2.5 Cool: 2 x 2.5

Specific data depending on software		Dishes	Glasses	Bistro	Cutlery
Theoretical capacity standard P1 / P2 / P3 *3	Racks / h	45 / 32 / 22 HighTemp: 26 / 20 / 15	22 / 32 / 49 Cool: 22 / 33 / 51	40 / 32 / 29	11
Theoretical capacity short programme *3	Racks / h	72	77	66	21
Rinse water consumption per wash cycle PT-M *4	l	2.2 HighTemp: 3.8	2.2 Cool: 3.6	2.2	3.6
Rinse water consumption per wash cycle PT-L, -XL *4	l	2.4 HighTemp: 3.8	2.4 Cool: 3.8	2.4	3.8
Tank temperature	°C	62 HighTemp: 66	62 Cool: 55	62	69
Rinse water temperature	°C	85	65 Cool: *5	65	86

*1 Working height optionally also 900 mm instead of 850 mm. The vertical dimensions then increase by 50 mm.
*2 Not applicable for PT ClimatePlus.
*3 Depending on local conditions (inlet water temperature / electrical supply), the values stated here may be reduced.
*4 Non-binding information. The actual rinse water consumption may vary depending on the on-site conditions.
*5 Depends on the inlet water temperature.

ELECTRICAL DATA

Mains voltage	Fuse protection	Total connected load Boiler heating 6.4 kW *	Total connected load Boiler heating 10.8 kW *
380 V / 3N~ / 50 Hz 380 V / 3N~ / 60 Hz	16 A	7.1 kW	8.3 kW
400 V / 3N~ / 50 Hz 400 V / 3N~ / 60 Hz	16 A 25 A 32 A	7.9 kW (Cool: 8.1 kW) 10.2 kW Cool: 11.5 kW	9.1 kW 13.2 kW 14.7 kW
415 V / 3N~ / 50 Hz 415 V / 3N~ / 60 Hz	16 A / 20 A 25 A 32 A	8.4 kW 10.9 kW –	9.7 kW 11.5 kW 15.7 kW
200 V / 3~ / 50 Hz 200 V / 3~ / 60 Hz	25 A 32 A	6.6 kW 8.0 kW	7.1 kW 9.0 kW
230 V / 3~ / 50 Hz 230 V / 3~ / 60 Hz	25 A 32 A	7.8 kW 10.1 kW	– –
230 V / 1N~ / 50 Hz 230 V / 1N~ / 60 Hz	32 A	6.9 kW	–
240 V / 1N~ / 50 Hz 240 V / 1N~ / 60 Hz	25 A 32 A 40 A 50 A	5.1 kW 7.0 kW 9.0 kW 10.9 kW	– – – –

ELECTRICAL DATA ClimatePlus (PT-M / PT-L)

Mains voltage	Fuse protection	Total connected load Boiler heating 6.4 kW *
380 V / 3N~ / 50 Hz 380 V / 3N~ / 60 Hz	16 A	7.1 kW
400 V / 3N~ / 50 Hz 400 V / 3N~ / 60 Hz	16 A 25 A / 32 A	7.9 kW 10.2 kW
415 V / 3N~ / 50Hz 415 V / 3N~ / 60Hz	15 A / 16 A / 20 A 25 A	8.4 kW 10.9 kW
230 V / 3~ / 50 Hz 230 V / 3~ / 60 Hz	25 A 32 A	7.8 kW 10.1 kW

* The actual capacity varies depending on the mains voltage.

Authorized Dealer

Brilliance Refrigeration Systems
#235 C1, Bommasandra Industrial Area,
Bangalore 560099

Tel: +91-98800 48383

enquiry@brilliance.co.in
brilliance.co.in

ISO
9001:2015